Código artículo 86.D087.0413.01

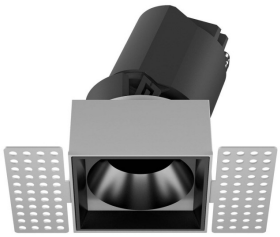

Cut out in the right size: 86.D084.0***.** 55mm, 86.D084.1***.**75mm ,86.D084.2***.**95mm,86.D085.0***.**55*55mm,86.D085.1***.**75*75mm

86.D085.2***.**95*95mm,86.D086.0***.**57mm,86.D086.1***.** 77mm,86.D086.2***.**97mm
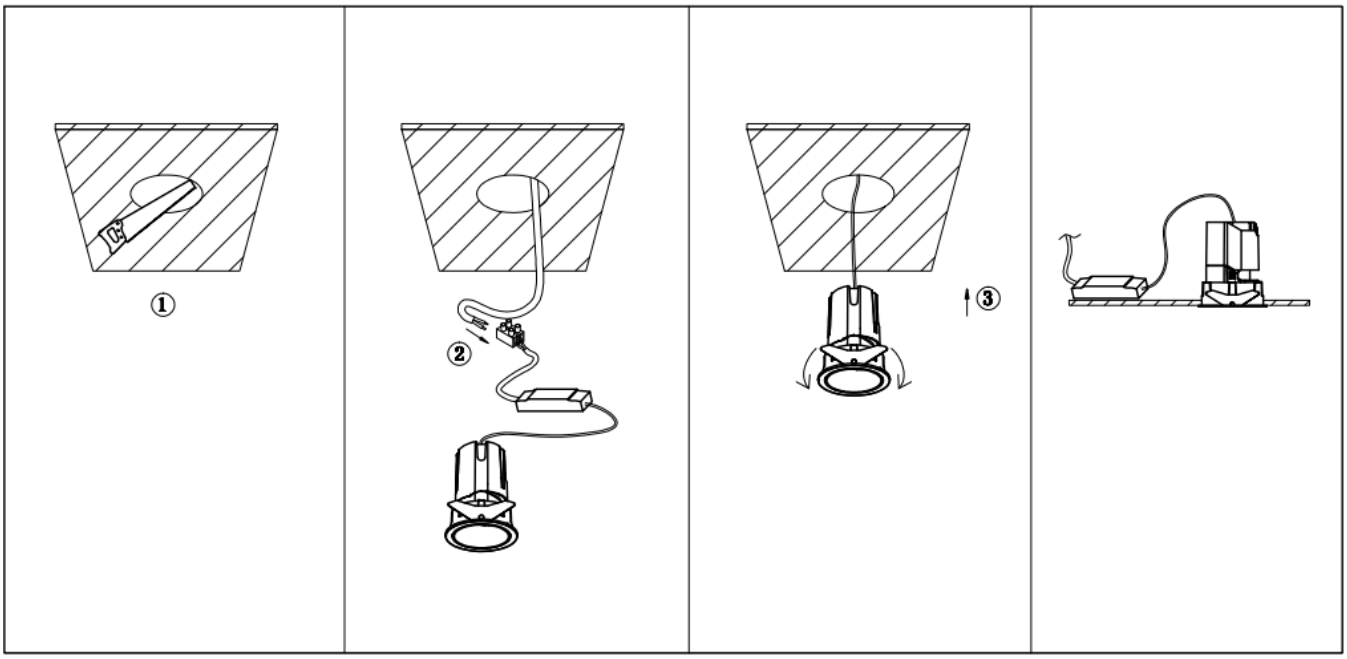
86.D087.0***.**57*57mm,86.D087.1***.** 77*77mm,86.D087.2***.**97*97mm,86.DS84.1***.**75mm,86.DS84.2***.**95mm
86.DS85.1***.**75*75mm,86.DS85.2***.**95*95mm,86.DS86.1***.** 77mm,86.DS86.2***.** 97mm,86.DS87.1***.**77*77mm
86.DS87.2***.**97*97mm,86.D284.0***.**128*67mm,86.D284.1***.**179*91mm,86.D284.2***.**223*112mm
86.D285.0***.**122*60mm,86.D285.1***.**164*77mm,86.D285.2***.**207*95mm,86.D286.0***.**128*67mm
86.D286.1***.**180*90mm,86.D286.2***.**225*111mm,86.D287.0***.**118*58mm,86.D287.1***.**165*77mm
86.D287.2***.**209*97mm